ITEM NO.	PART NUMBER	DESCRIPTION	QTY.
1	BRNGCOVR03	BEARING COVER TALL	1
2	BRNGCOVR04	BEARING COVER 1" SHAFT	1
3	BRNGINS100-ASSY	1.00" BEARING ASSEMBLY	2
4	EP12000015	DRIVE SHAFT, EP-8, W/ TORQUE ARM	1
5	EP80026	CHUTE PAD	1
6	EP8S0008	MOUNTING BRACKET CHUTE	2
7	EP8S0025	CHUTE BOTTOM PLATE	1
8	EXTR092000	30MM HEX SPACER	1
9	MEP80023	EXIT GUIDE L.H.	1
10	MEP80024	EXIT GUIDE R.H.	1
11	MEP8S0006	SIDE,CHUTE L.H.	1
12	MEP8S0007	SIDE,CHUTE R.H.	1
13	MOTRAC0025-M	MOTOR, 1/4HP, 56C, 208-230/460 VAC	1
14	NMRV500040	GEAR REDUCER, 050 FRAME, 40:1, 1" BORE, 56C	1
15	NMRV50TQARM	NMRV50 TORQUE ARM	1
16	NMRV50XCOV	NMRV 050 OUTPUT COVER	1
17	PULLCNVEP8	FOOD GRADE PULLEY, EP-08	1

REVISIONS				
ZONE	REV.	DESCRIPTION	DATE	APPROVED
A4	A	REMOVED TORQUE ARM PARTS, ADDED EXTR092000	3/4/2015	JRM

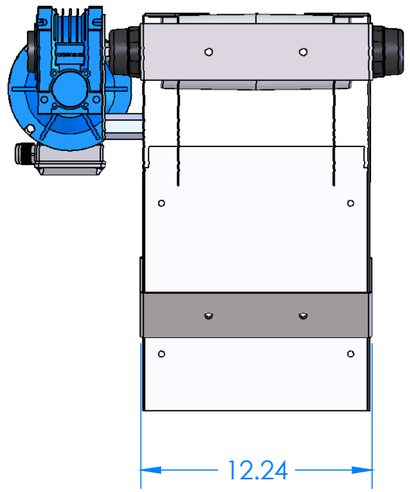

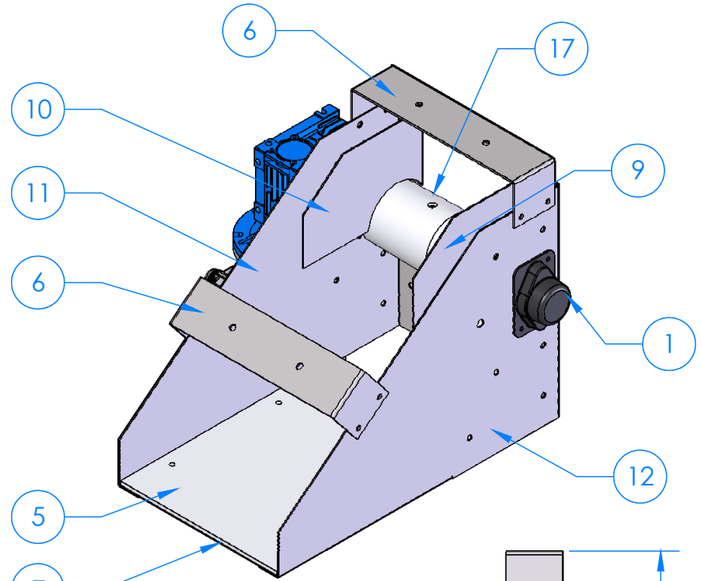

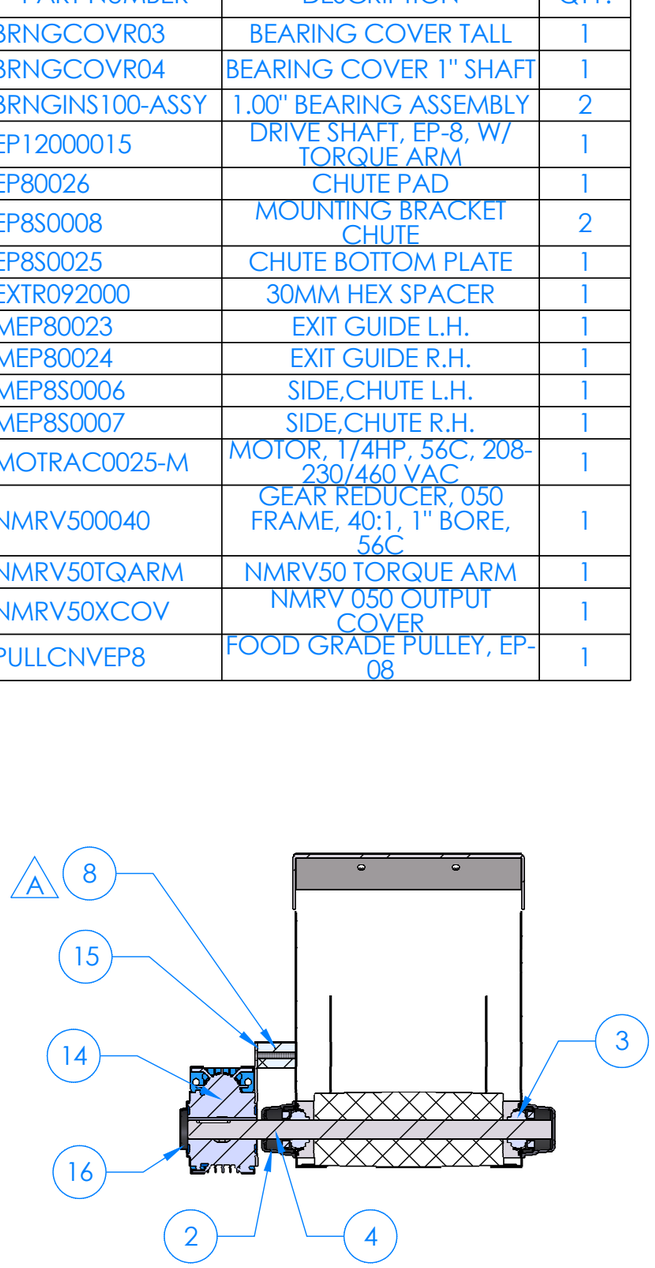

SECTION A-A

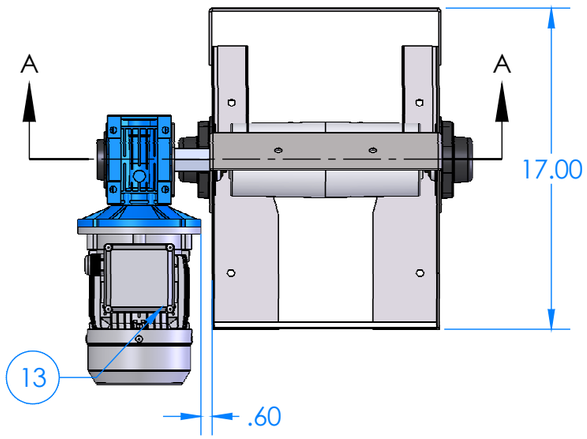

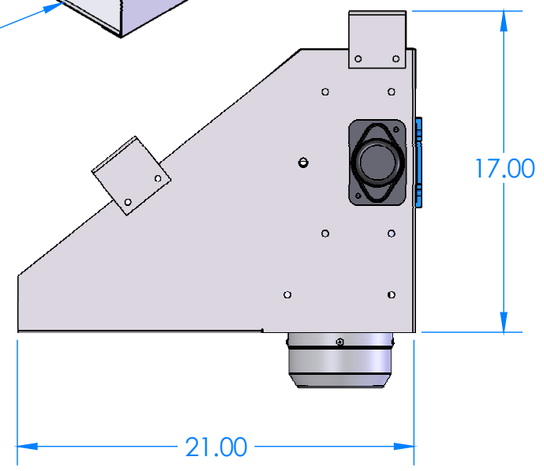

NOTICE
This document is the property of SHIBUYA HOPPMANN CORPORATION. It is not for publication and is issued in strict confidence and on condition that it is not copied, reprinted or disclosed to a third party either wholly or in part without the written consent of SHIBUYA HOPPMANN CORPORATION. Possession of this document does not authorize the holder to manufacture/duplicate the article it describes / specifies without the consent in writing of the SHIBUYA HOPPMANN CORPORATION. This document is to be returned on demand.

MATERIAL: LISTED -

FINISH: LISTED

QTY: 1

NEXT ASSEMBLY:

UNLESS OTHERWISE NOTED:
ALL DIMENSIONS ARE IN INCHES

TOLERANCES FRACTIONS: ±1/32
ANGLES: ±.25°
DECIMALS: .x ± .030
.xx ± .015
.xxx ± .005

FINISH 125 REMOVE BURRS AND SHARP EDGES

THIRD ANGLE PROJECTION

TITLE: EP-08 HEAD & DRIVE, TORQUE ARM, AC

Shibuya Hoppmann™
www.shibuyahoppmann.com | sales@shibuyahoppmann.com

FAB / CHECK	DATE	FILE NUMBER: F2513000538A.SLDDRW						
		DRAFTER	DATE	CHECKED	DATE	E.E.	DATE	SCALE:
		JRM	06/16/14	-	-	_	_	1:8

DRAWING NO.: F2513000538

REV: A

C:\shc_vault\item drawings\f2\f251\assembly\F2513000538
PRINTED ON 7/1/2022 BY isong